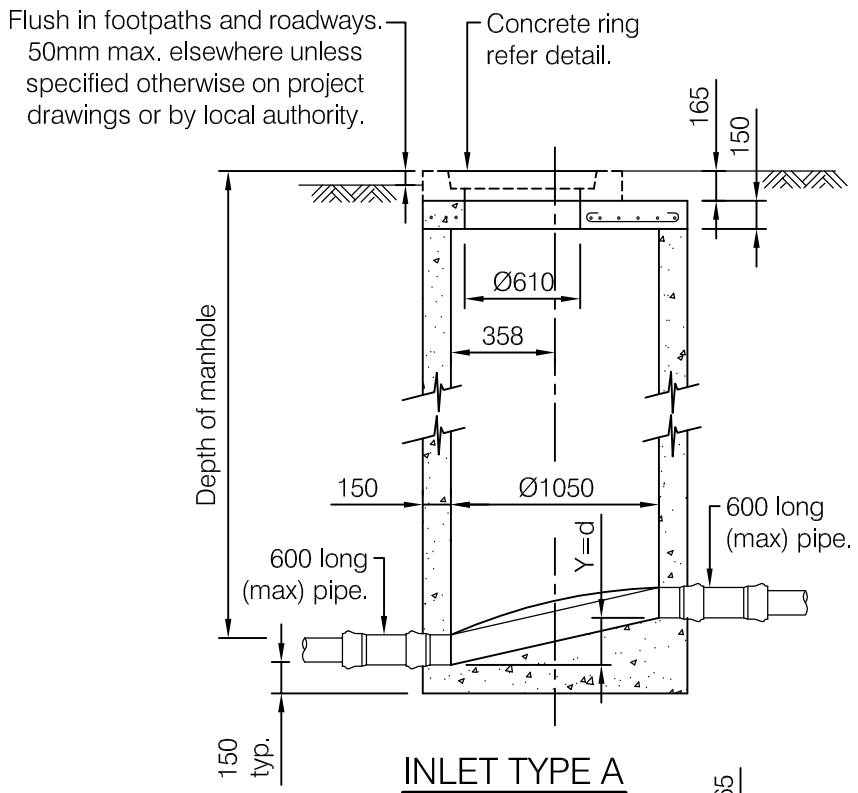

INLET TYPE A

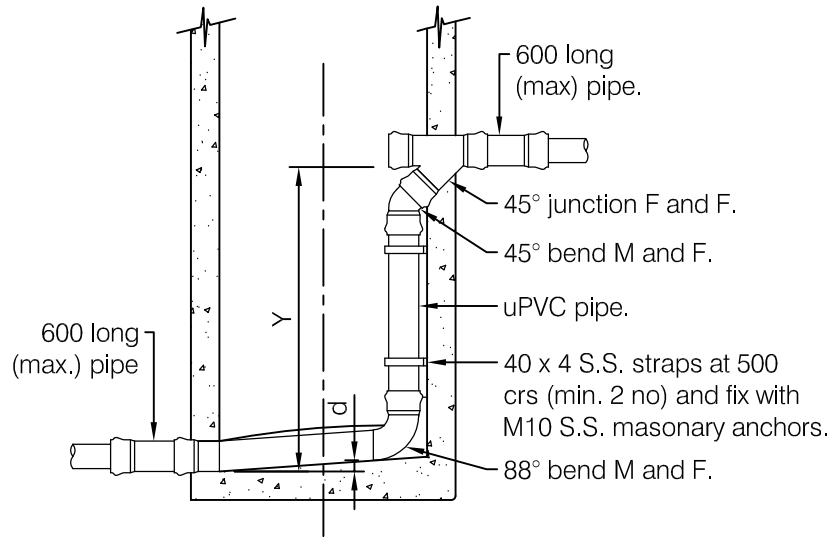

INLET TYPE C

MANHOLE DROP - (Y)

NOM. DIA	TYPE A		TYPE C	
	MIN.	MAX.	MIN.	MAX.
150	-	250	600	-
225	-	280	700	-
300	-	330	900	-

INLET TYPES A TO C		
Manhole description	Diagram	Min. drop d
Same diameters		
Straight through		25
Angle up to 45°		25
Angle from 45 -90°		35
Branch at angle less than 30°		25
Branch at angle 30° 60°		50
Branch at angle 60° 90°		70
Main and branch varying diameters		
Main Dia / Branch Dia		
300 / 225		80
300 / 150		150
300 / 100		200
225 / 150		80
225 / 100		130
150 / 100		50
House drains entering end manholes		
150 House drain		30
100 House drain		80

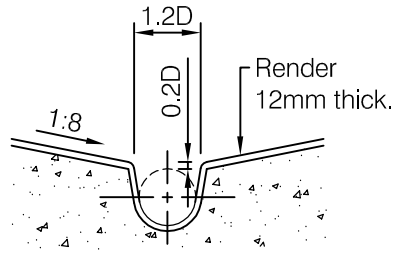

SECTION

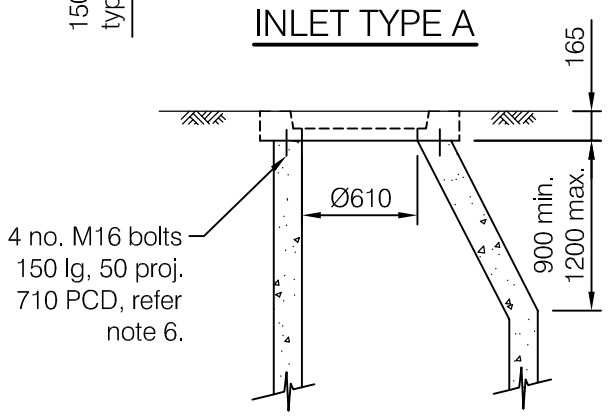

ALTERNATE TAPERED TOP

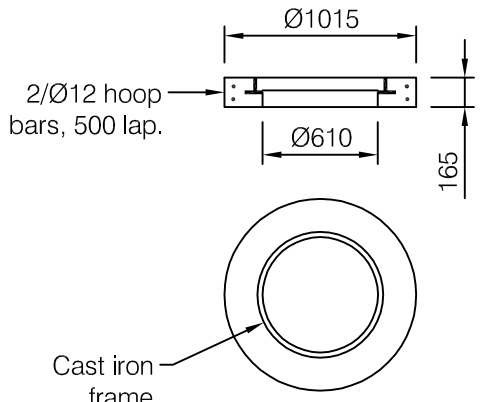

CONCRETE RING

(cover omitted for clarity)

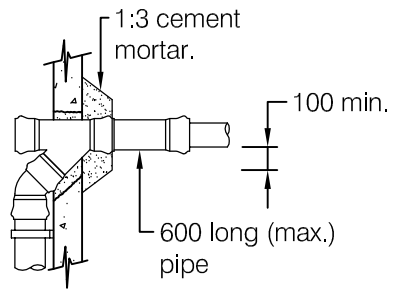

PRECAST / CAST IN SITU BREAK IN DETAIL

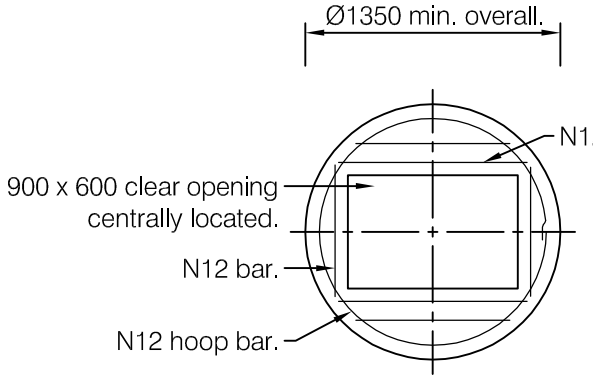

RECTANGULAR COVER

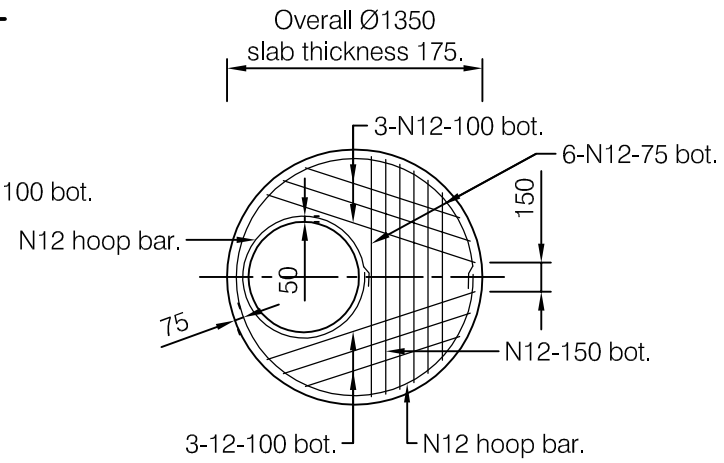

CIRCULAR COVER

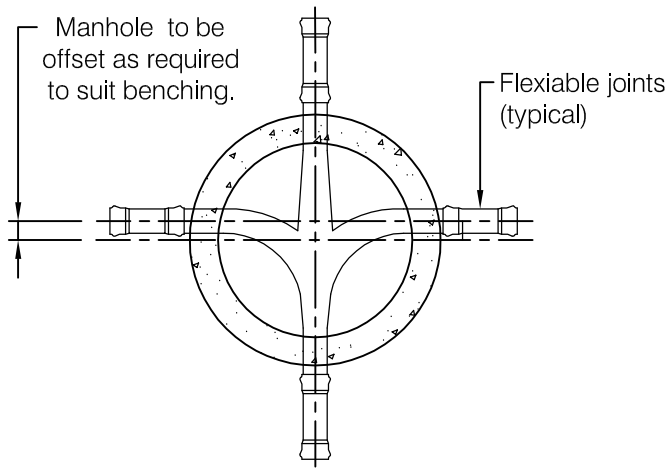

MANHOLE BENCHING

NOTES

1. Pipes shown are diagramatic only and are not meant to represent any particular class or material.
2. All concrete shall be grade N32, in accordance with AS 1379 and AS 3600. Minimum cover to be 40mm.
3. All couplings entering concrete shall be factory sanded to provide a secure watertight bond with concrete wall.
4. For manhole depths greater than 3.0m wall thickness shall be increased to 225mm minimum and depth of base below outlet shall be 300mm minimum. Manholes greater than 6.0m depth shall be engineer desinged and detailed.
5. Covers to manholes to be cast iron sealed (gas tight) covers and shall be Class B inside properties, Class C elsewhere.
6. Bolts to concrete ring required only when bolt down cover is specified, otherwise shall be seated on mortar bed.
7. Connections to existing manholes shall be carried out only with prior approval of Concil.
8. Where depth of manhole < 1425mm a rectangular cover shall be used, otherwise all covers shall be circular.
9. Manhole covers shall be located directly over outlet pipe.
10. Maximum change of angle through manhole shall be 90°.
11. Covers shall be fitted with a thick coating of heavy grease to the seating ring to prevent seizing.
12. All dimensions are in millimetres.

B	INLET TYPE B REMOVED	18/01/05
A	ORIGINAL ISSUE	12/03/04
	REVISIONS	DATE

DISCLAIMER

The authors and sponsoring organisations shall have no liability or responsibility to the user or any other person or entity with respect to any liability, loss or damage caused or alleged to be caused, directly or indirectly, by the adoption and use of these Standard Drawings including, but not limited to, any interruption of service, loss of business or anticipatory profits, or consequential damages resulting from the use of these Standard Drawings. Persons must not rely on these Standard Drawings as the equivalent of, or a substitute for, project-specific design and assessment by an appropriately qualified professional.

FNQROC

SEWERAGE MANHOLES

Standard Drawing

S3000

A B